2M PTZ Dome Network Camera

x25

AI

VVK-NSZ21X25

Specification

VIDEO	
Imaging Device	1/2.8" Progressive CMOS
Max. Framerate	Main Stream: Max. 30fps (60Hz/50Hz) Sub Stream : Max. 30fps (60Hz/50Hz) Mobile Stream : Max. 30fps (60Hz/50Hz)
Min. Illumination	Color: 0.002 Lux @ (F1.6, AGC ON) B/W: 0 Lux with IR
LENS	
Focal Length (Zoom Ratio)	5.0 mm to 125 mm
Angular Field of View	Horizontal: 56.9°(W)~2.9°(T), Vertical: 32.2°(W)~1.6°(T), Diagonal: 65.2°(W)~3.3°(T)
PAN/TILT/ROTATE	
Pan / Tilt / Rotate Range	360° / -10° to 90° (auto flip)
OPERATIONAL	
Camera Title	Title Displayed up tp 32 charactors
Analytics	Face Detection (FD) Pedestrian&Vehicle Detection (PD&VD) Intrusion Detection (ID) Line Crossing Detection (TD) Tripwire Counting (TC) Stationary Object Detection (OBJ) Heat Map (HM) Crowd Density Detection (CD) Queue Length Detection (QD) License Plate Detection (LPD) Rare Sound Detection (RSD)
Alarm I/O	1 Input, 1 Output
Alarm Triggers	Motion, Sound Detection, Alarm
Alarm Events	Notofication vis E-mail, Image file upload vis FTP, Video file upload via FTP, Image file upload to Cloud (Dropbox), Video file upload to Cloud (Dropbox), Micro SD recording at event triggered, Event Push via HTTP / UDP
Audio In	1 Line-In (RCA)
Audio Out	1 Line-Out (RCA)
IR Viewable Length	328.1ft (100M)
NETWORK	
Ethemet	RJ45(10/100BASE-T)
Video Compression	H.265+/H.265 Main Profile, H.264+/H.264 High Profile,MJPEG(Sub Stream Only)
Protocol	IPv4/IPv6, HTTP, HTTPS, FTP, SMTP, UPnP, SNMP, DNS, DDNS, NTP, RTSP, TCP/IP, UDP, DHCP, PPPoE
GENERAL	
Webpage Language	English, Korean
Edge Storage	Micro SD/SDHC/SDXC Slot (256GB)
ENVIRONMENTAL & ELECTRICAL	
Operating Temperature	-30 °C to 60 °C
Certification	IP66
Input Voltage	PoE(IEEE802.3at) /12VDC
Power Consumption	22 W
MECHANICAL	
Color / Material	White / Metal
Product Dimensions	Ø6.30x10.63in(160x270mm)
Weight	2.5kg

Feature

- 2MP (1920 x 1080) @ 30fps
- Max. resolution: 1920 x 1080
- H.265+/H.265, H.264+/H.264, MJPEG Encoding
- Day & Night IR cut filter
- Motorized 5.0 - 125mm Lens (F1.5)
- 3D DNR, WDR, HLC, BLC and ROI Encoding
- Intelligent Analytics
- Built-in micro SD card slot, up to 256GB
- 150M IR distance
- IP66 Certification
- DC12V/PoE power supply
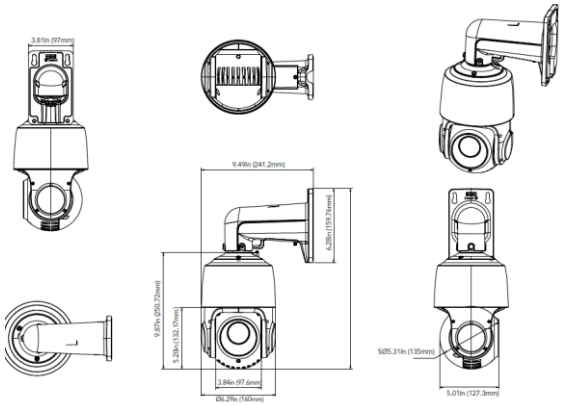
Dimension